# COMBINATION FIXTURE - M3120 90L

Item:_____

Unit may be pictured with some optional features.

**1.6 gpf (6.0 Lpf) Fixtures - 3" waste connection**

❑ **M3120-90-L** Back supply connection 1 1/2" (38mm) FIPT.

**1.28 gpf (4.8 L pf) Fixtures - 2-3/8" waste connection**

❑ **MHET3120-90-L** Back supply connection 1 1/2" (38mm) FIPT.

- **Chase mounted cabinet, wall outlet waste.**
- **Lavatory Basin-**
  - Rectangular.
  - Fast drain.
  - Air circulating self draining soap dish.
  - 4" (102mm) high backsplash.
  - 1 1/4" (32mm) OD elbow sink waste with air vent, plain end extended 4" (102mm) past back of fixture for slip type connection.
  - Drip Dimple.
- **Toilet Bowl-**
  - Elongated.
  - High polished integral seat.
  - Self draining flushing rim.
  - Blowout flushing action.
  - Fully enclosed trap.
  - Bead blast inside and underneath bowl.

WaterSense Meets EPA Criteria
Certified by QAI Laboratories

**WARNING**: Cancer and Reproductive Harm - www.P65Warnings.ca.gov.

## ► DESCRIPTION

This Combination Lavatory/Toilet Fixture is designed for areas with an accessible pipe chase. Fixtures are fabricated using heavy gauge type 304 stainless steel, welded to form a vandal resistant unit. Internal piping is stainless steel. Exposed surfaces are bead blasted to a uniform satin finish, except for the integral seat which is polished to a bright finish.

## ► PERFORMANCE STANDARDS

Metcraft's standard toilet is a 1.6 gpf (6.0 lpf) fixture with a 3'' (76mm) waste outlet. Metcraft offers a "High Efficiency Toilet" (HET) 1.28 gpf (4.8 lpf) with a 2 3/8" (60mm) waste outlet as an option. Metcraft bowls and assemblies are designed to withstand 5000 lb. (22kN) loading without permanent deflection and damage. This fixture meets or exceeds ASME A112.19.3 / CSA B45.4 standards for "Stainless Steel Plumbing Fixtures". The trap will pass a 2 1/8" (54mm) dia. ball. A minimum 1" (25mm) supply providing 35psi (241kPa) flushing pressure is required.

Listed by QAI Quality Auditing Institute c US

## ► INSTALLATION

An accessible pipe chase is required. Six anchor rods screw into sockets on back of the fixture. Anchor rods pass through the wall and are secured with washers and hex nuts on the chase side of the wall. No exposed fasteners are used. The installer must provide wall openings for anchor rods, piping, and valve operators per rough-in drawings provided by Metcraft. Valves should be installed in the pipe chase.

Water Consumption:
With a low consumption flush valve - 1.6 gpf (6 liters)
With a HET consumption flush valve - 1.28 gpf (4.8 liters)

### RECOMMENDED FLUSH VALVES

| | SLOAN | ZURN | DELANY |
|---|---|---|---|
| Low consumption | 603-1.6 | Z6603-1.6 | 623-1.6 |
| HET | 603-1.28 | Z6603-1.28 | |

## WALL THICKNESS AND TYPE (Must Specify)

Thickness:_____ Type: ❑Concrete ❑Block ❑Steel

### OUTLET/MOUNTING

- ❑ **FW** On the floor, wall outlet (Standard).
- ❑ **OW** Off the floor, wall outlet.
- ❑ **FF** On the floor, floor outlet.

### SPOUT

- ❑ **B1** Filler/Bubbler Spout.
- ❑ **B1H** Suicide Resistant Filler/Bubbler Spout.
- ❑ **B2** Filler/bubbler Spout with mouthguard.
- ❑ **B3H** Suicide Resistant Filler Spout.

### HAND BASINS

- ❑ **OB** Oval Basin.
- ❑ **RB** Rectangular Basin. (Standard)

### LAVATORY WASTE

- ❑ **EPE** Elbow Waste Plain End. (Standard)
- ❑ **EPL** Elbow Waste Plain End through the wall.
- ❑ **ET2** Elbow Waste.
- ❑ **PPE** P-Trap Plain End.
- ❑ **PPL** P-Trap Plain End through the wall.
- ❑ **PT2** P-Trap.
- ❑ **SJP** Slip Joint P-Trap.
- ❑ **CWO** Combined Waste.

### TOILET WASTE

- ❑ **PE** Plain End Waste - 4" off fixture. (Standard)
- ❑ **PL** Plain End Waste - 3" into Chase.
- ❑ **GW** Gasket Waste Outlet.

### Product Options

- ❑ **AFH** Hydraulic Anti-Flood Valve.
- ❑ **MS** Mirror Finish Toilet Seat. (Standard)
- ❑ **MA** Ligature Resistant Skirt.
- ❑ **HT** Towel Hook.
- ❑ **PH** Recessed Tissue Holder. (Standard)
- ❑ **TB** Toothbrush Holder.
- ❑ **OF** Overflow Vent.
- ❑ **VG** Vent Grille

### OPTIONS/ACCESSORIES

- ❑ **A168** Metal Template for Wall Openings.
- ❑ **TSC** Toilet Seat Cover

### No-Hub Connectors

- ❑ **A210-3** 3" s/s to 3" CI 1.6gpf No-hub Connector.
- ❑ **A210-1** 3" s/s to 4" CI 1.6gpf No-hub Connector.
- ❑ **A210-9** 2-3/8" s/s to 3" CI 1.28gpf No-hub Connector.
- ❑ **A210-8** 2-3/8" s/s to 4" CI 1.28gpf No-hub Connector.

### OPTIONS/ACCESSORIES (CONTINUED)

- ❑ **A215-3** 3" No-hub Test Tee.
- ❑ **A215-4** 4" No-hub Test Tee.
- ❑ **A216-3** Pinned Cleanout Plug 3"
- ❑ **A216-4** Pinned Cleanout Plug 4"
- ❑ **A247** Flush Valve thru wall connector.

### LAVATORY WASTE EXTENSIONS

- ❑ **A235** Trap Assembly. (For 1.5" female connection)
- ❑ **A240** Waste Extension for 1-1/2". (For 1.5" female connection)

### LAVATORY WASTE ADAPTER COUPLINGS

- ❑ **A205-1** Lavatory Waste Coupling 1-1/4" (32mm) s/s to 1-1/2" (38mm) Copper.
- ❑ **A205-2** Lavatory Waste Coupling 1-1/4" (32mm) s/s to 1-1/2" (38mm) PL/STL.
- ❑ **A205-3** Lavatory Waste Coupling 1-1/4" (32mm) s/s to 2" (38mm) CI.

### PNEUMATIC VALVE ASSEMBLIES (0.5 GPM Flow Valves)

- ❑ **A311** Single Temperature, Single Fixture Valve.
- ❑ **A312** Dual Temperature, Single Fixture Valve.
- ❑ **A313** Single Temperature, Manifolded Fixture Valve.
- ❑ **A314** Dual Temperature, Manifolded Fixture Valve.

## COMBINATION FIXTURE - M3120 90L

**Item:**_____

M3120-90L Shown Below

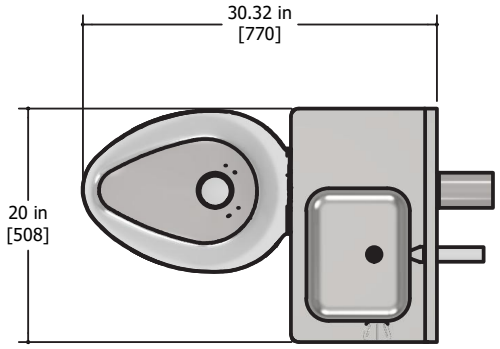


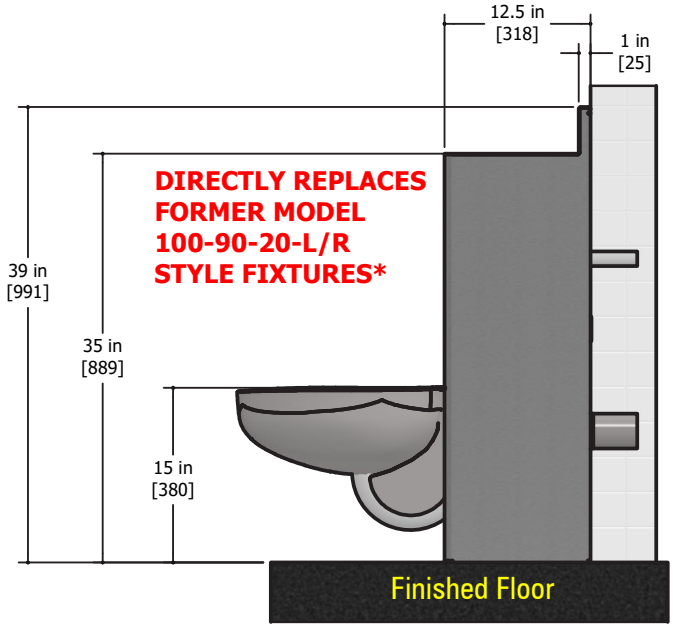


* Former style 100- fixtures are different in over all size and rough-in locations than current fixtures.

Due to continuous product improvement Metcraft reserves the right to make changes in design and specifications without prior notice. All dimensions should be verified with the factory for current information.

| APPROVED FOR MANUFACTURING | Company:_____ Name:_____ |
|---|---|
| | Signature:_____ Date:_____ |